SERIES
SCD02 & SCD03
3747 LB (16,667 N) & 3789 LB (16,854 N)

SPEED:	Up to 11.9 in/sec (302 mm/sec)
BRAKE MOTOR:	230/460 VAC, 3 ph, 60 Hz
STROKES:	Up to 36 in (914 mm)
TEMPERATURE RANGE:	-0ºF to 120ºF (-18ºC to 50ºC)*

*For other temperatures please consult the factory

FEATURES & BENEFITS

- Easy to install - reduces installation costs
- Custom designed for your application
- Low maintenance design - easy to maintain after installation
- Long product life expectancy
- Steel trunnion housing
- Chrome plated translating tube
- Hydraulic cylinder grade wiper seals
- Guided at both ends by polymeric bearings
- Trunnion mounting
- Ring Kit Encoder
- Standard brake motors use Class F insulation with Class B rise (1.15 S.F.)
- Standard brake motors totally enclosed and fan cooled. IP66 or wash-down motors available.
- Standard brake motors are UL, CSA, or CE marked, depending on voltage
  Specify when ordering.

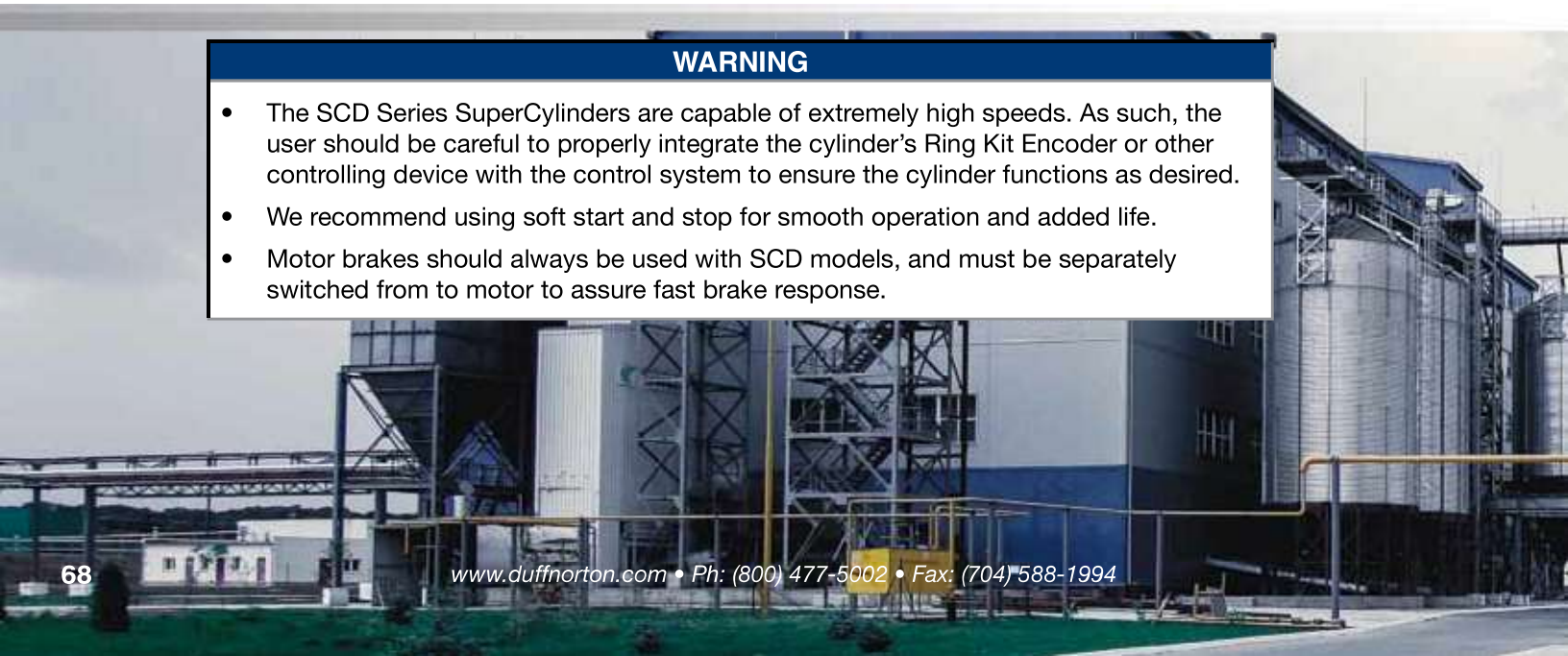

WARNING

- The SCD Series SuperCylinders are capable of extremely high speeds. As such, the user should be careful to properly integrate the cylinder's Ring Kit Encoder or other controlling device with the control system to ensure the cylinder functions as desired.
- We recommend using soft start and stop for smooth operation and added life.
- Motor brakes should always be used with SCD models, and must be separately switched from to motor to assure fast brake response.

Motor HP	RPM	C	FP
1	1140	22.38	7.16
	1725	20.06	7.16
1.5	1140	23.38	7.16
	1725	21.50	7.16
2	1140	24.35	9.22
	1725	22.50	7.16
3	1140	27.35	9.22
	1725	23.23	9.22
5	1140	28.62	10.81
	1725	23.68	9.22

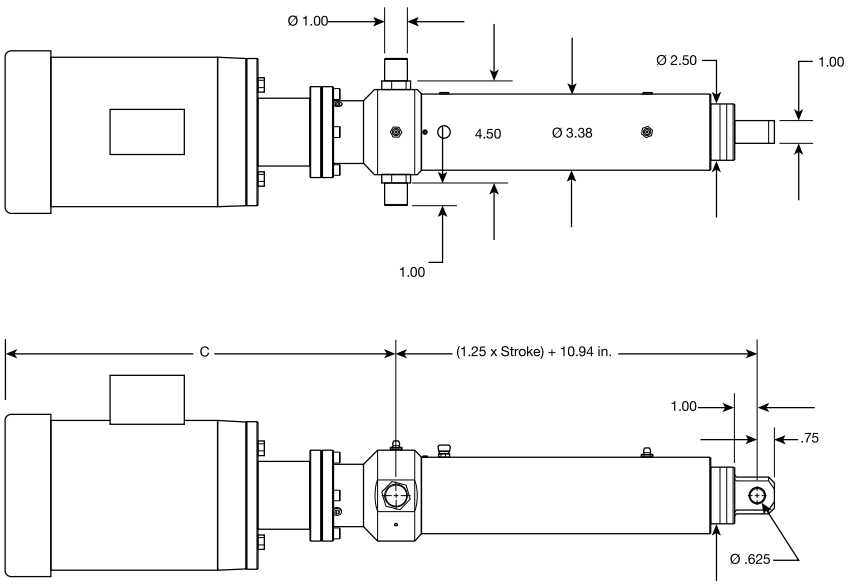

PRODUCT INFORMATION

Model Number	Capacity (lbs)	Speed (in/sec)	Motor RPM	HP	Max Stroke (in)	Screw Life (million in)	Dia x Lead (in)
SCD02							
ND02-410	825	7.19	1725	1	24	7.5	1.00 x .25
ND02-610	1249	4.75	1140	1	30	2.1	1.00 x .25
ND02-415	1238	7.19	1725	1.5	24	2.2	1.00 x .25
ND02-615	1873	4.75	1140	1.5	30	0.6	1.00 x .25
ND02-420	1651	7.19	1725	2	24	0.9	1.00 x .25
ND02-620	2498	4.75	1140	2	30	0.3	1.00 x .25
ND02-430	2476	7.19	1725	3	24	0.3	1.00 x .25
ND02-630	3747	4.75	1140	3	30	0.1	1.00 x .25
SCD03							
ND03-410	500	11.87	1725	1	25	472.4	1.17 x .41
ND03-610	756	7.85	1140	1	31	136.7	1.17 x .41
ND03-415	749	11.87	1725	1.5	25	140.5	1.17 x .41
ND03-615	1134	7.85	1140	1.5	31	40.5	1.17 x .41
ND03-420	999	11.87	1725	2	25	59.2	1.17 x .41
ND03-620	1512	7.85	1140	2	31	17.1	1.17 x .41
ND03-430	1499	11.87	1725	3	25	17.5	1.17 x .41
ND03-630	2268	7.85	1140	3	31	5.1	1.17 x .41
ND03-450	2498	11.87	1725	5	25	3.8	1.17 x .41
ND03-650	3780	7.85	1140	5	31	1.1	1.17 x .41

SERIES
SCD06
3265 LB (14,523 N)

Motor HP	RPM	C	FP
1	1140	23.56	7.16
	1725	21.25	7.16
1.5	1140	24.56	7.16
	1725	22.68	7.16
2	1140	25.53	9.22
	1725	23.68	7.16
3	1140	28.53	9.22
	1725	24.00	9.22
5	1140	24.41	10.81
	1725	24.86	9.22

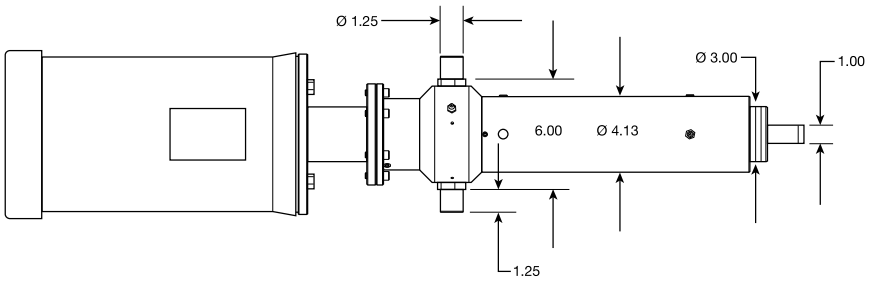

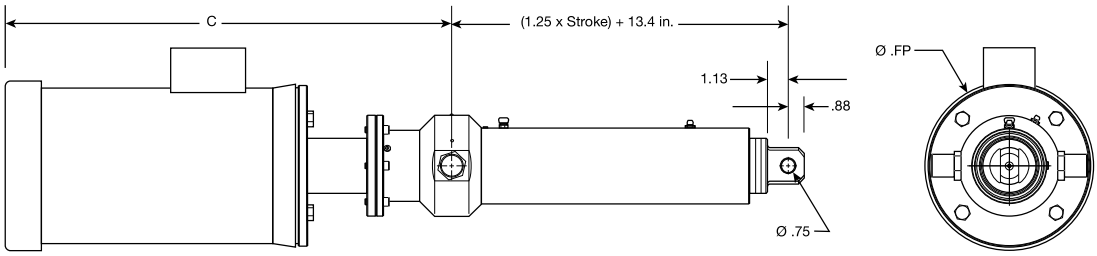

PRODUCT INFORMATION

Model Number	Capacity (lbs)	Speed (in/sec)	Motor RPM	HP	Max Stroke (in)	Screw Life (million in)	Dia x Lead (in)
ND06-410	435	13.63	1725	1	29	12331.9	1.50 x .47
ND06-610	659	9.00	1140	1	36	3546.8	1.50 x .47
ND06-415	653	13.63	1725	1.5	29	3645.5	1.50 x .47
ND06-615	988	9.00	1140	1.5	36	1052.5	1.50 x .47
ND06-420	871	13.63	1725	2	29	1536.2	1.50 x .47
ND06-620	1317	9.00	1140	2	36	444.4	1.50 x .47
ND06-430	1306	13.63	1725	3	29	455.7	1.50 x .47
ND06-630	1976	9.00	1140	3	36	131.6	1.50 x .47
ND06-450	2177	13.63	1725	5	29	98.4	1.50 x .47
ND06-650	3293	9.00	1140	5	36	28.4	1.50 x .47
ND06-475	3265	13.63	1725	7.5	29	29.2	1.50 x .47

NOTE

- Catalog pages provide performance specifications for standard NEMA brake motors. Models wth IEC or Servo adapter flanges and motors can be provided.
- Should your application require performance criteria outside of our standard model performances, please see page 67 for the revelant performance/design formulas.

SERIES SCD

Design Formulae

Customized Performance Considerations

There are many factors to be considered when designing applications for direct drive models. Please review the following formulas carefully, and feel free to contact our customer service department with questions.

Screw Specifications:

Dia x Lead (in)	D_{min}	L_{10} Rating	Max RPM
1.00 x 0.25	0.82	1612	3000
1.17 x .413	0.87	3894	2560
1.50 x .474	1.14	10,050	2000

Max RPM = maximum screw speed due to ball velocity limit.

L_{10} rating = Load (lbs) to produce 10% failure rate after 1,000,000 inches of travel.

D_{min} = Screw minor dia.(in.)

Design Formulae:

$$\text{Speed (in/sec)} = \frac{\text{Screw Lead x Motor RPM}}{60}$$

$$\text{Capacity (lbs)} = \frac{\text{5.65 x Motor torque (in-lbs)}}{\text{Screw Lead}}$$

$$\text{Motor torque (in-lbs)} = \frac{\text{Horsepower x 63000}}{\text{RPM}}$$

$$\text{Screw Life (million inches of travel)} = \left[\frac{L_{10}\text{ Rating}}{\text{Load}}\right]^3 \text{ x Screw Lead}$$

NOTE

- Critical Speed: High speed rotating shafts are subject to destructive vibrations. To prevent instability, the speed and length must be held within limits per the following equation:

  $$RPM_{max} = \frac{1.37 \times 10^6 \times D_{min}}{L^2}$$ where L = Actuator stroke (inches)

- This equation for critical RPM includes a 0.80 factor of safety.