MACHINE SCREW ACTUATORS — STAINLESS STEEL

2 to 100 TONS

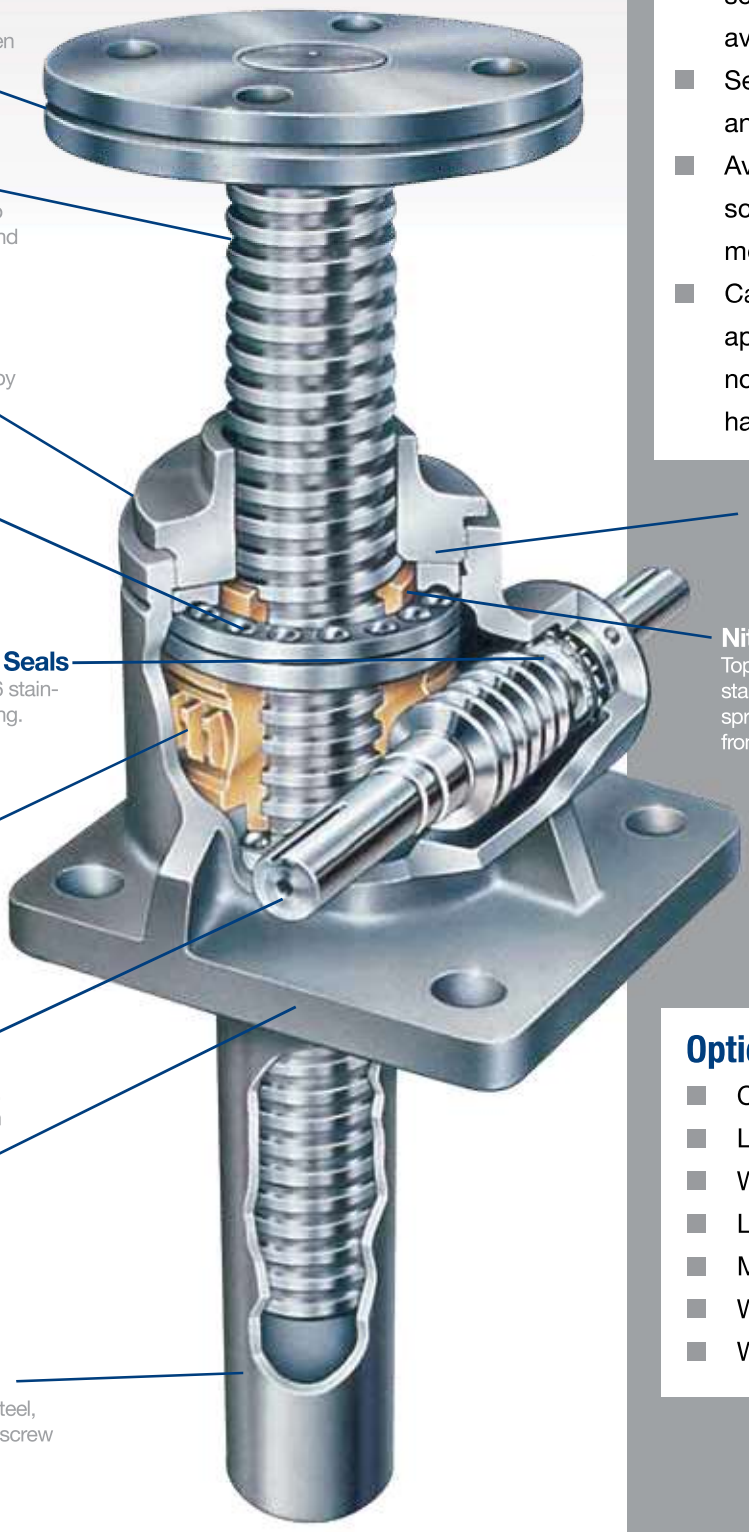

Top Plate
316 stainless steel. Must be bolted to lifting member to prevent rotation except when screw is keyed.

Lifting Screw
316 stainless steel. Also available as threaded end or clevis end.

Shell Cap
316 stainless steel. Locked into place by set screws.

Carbon Steel Load Bearings
Top and bottom to take full load in either direction.

Worm Bearings & Seals
Both ends of worm. 316 stainless steel case and spring.

Worm Gear
Wear resistant Bronze. Accurately hobbed for greater gear contact.

Worm
316 stainless steel. Standard. (17-4 Ph available)

Housing
316 stainless steel

Coverpipe
316 stainless steel, Protects lifting screw threads.

Guide Bushing
Bronze

Nitrile Rubber Seals
Top and bottom with 316 stainless steel case and spring. Protects gearcase from contamination.

FEATURES

- Anti-backlash models available.
- Upright and inverted rotating screw models with traveling nut available.
- Sealed gear cavity keeps water and other contaminants out.
- Available with keyed lifting screws for translating screw models.
- Can be retrofitted into applications where Duff-Norton non-stainless steel actuators have been previously used.

Optional Special Features:

- Closed heights
- Lifting screw ends
- Worm shaft extensions
- Lifting screw thread pitches
- Materials
- With stop nuts
- With boots

www.duffnorton.com
Ph: (800) 477-5002 • Fax: (704) 588-1994

ACTUATORS — STAINLESS STEEL

MODEL NUMBERING SYSTEM

FL - TSM - 9002 - 6 - 1R

Model Prefix

R - Reducer
F - C-face Adapter
H - Hand Wheel
L - Limit Switch
E - Encoder
J - Rotary Counter

Screw End & Configuration

T - Threaded End
C - Clevis End
M - Top Plate
P - Plain End

K - Keyed Screw
CC - Double Clevis

D - Inverted Rotating
U - Upright Rotating

Series & Capacity No.

Series:
Machine Screw
(90xx, 18xx, 70xx, 25xx)
Special MS
(100xx, 20xx, 80xx, 35xx)

(1800 series base configurations are available only on 2 and 50 Ton models)

Capacities:
Upright model suffixes end with the capacity number.
Inverted model suffixes lower the capacity number by one digit.
Rotating model suffixes raise the capacity number by one digit.

SM - Base Model

Travel

1” increment travels are always represented using the exact travel amount.

Travels with fractional lengths are quoted using that length, but are serialized when the order is processed.

Serialized digits in this position may also be used for other models containing special features.

Model Suffix

B - Boot
L - Single End Worm Ext. Left
R - Single End Worm Ext. Right
1 - Optional Ratio #1
2 - Optional Ratio #2
X - Supplied without cover pipe

NOTE

Not sure if your application requires the full protection offered by our Stainless Steel actuators? Contact our Customer Service group to explore your options as there have been many instances where Duff-Norton has supplied actuators with Stainless Steel screws, worm shaft, and with actuator housings protected by our Epoxy / Polyurethane paint process.

Performance Table Instructions – pages 15, 39, 46, 52, 55, and 76

When reviewing any Duff-Norton Actuator Performance Specifications Table, as part of the process of selecting the best-suited actuator for your application, there are several important worm-gear ratios to consider.

Standard Ratio – is frequently chosen when higher speeds and efficiency ratings are desired.

Optional Ratio – is frequently chosen when the application requires higher lifting capacities, lower speeds, or to ease the use of a handwheel.

Numeric Ratio – is frequently chosen for applications requiring fine adjustments, higher lifting capacities, lower speeds, the easy use of a handwheel, self locking applications, and also offers the benefit of an even number of worm input turns per inch of stroke.

Performance Specifications - Machine Screw Actuator Stainless Steel											
Capacity (Tons) - 17-4PH Worm		**2**	**5**	**10**	**15**	**20**	**25**	**30**	**35**	**50**	**100**
Capacity (Tons) - 316 SS Worm		**0.67**	**1.66**	**3.33**	**5.00**	**6.66**	**8.33**	**9.9**	**11.66**	**16.66**	**33.33**
Lifting Screw	Diameter (in)	1	1-1/2	2	1-1/4	2-1/2	3	3	3-3/4	4-1/2	6
	Pitch (Std. & Opt.)	0.250	0.375	0.500	0.500	0.500	0.666	0.666	0.666	0.666	0.750
	Pitch (Numerical)	—	0.250	0.250	0.250	0.250	0.320	0.32	0.320	0.320	—
	Type	ACME	ACME	ACME	ACME	ACME	ACME	ACME	ACME	Mod, Sq.	Mod, Sq.
Worm Gear Ratios	Standard	6:1	6:1	8:1	8:1	8:1	10-2/3:1	10-2/3:1	10-2/3:1	10-2/3:1	12:1
	Optional No. 1	24:1	24:1	24:1	24:1	24:1	32:1	32:1	32:1	32:1	36:1
	Optional No. 2	12:1	12:1	—	—	—	—	—	—	—	—
	Numeric Ratio	25:1	25:1	25:1	25:1	25:1	32:1	32:1	32:1	32:1	—
Turns of Worm for 1 inch Stroke	Standard	24	16	16	16	16	16	16	16	16	16
	Optional No. 1	100	67	50	50	50	48	48	48	48	48
	Optional No. 2	50	33	—	—	—	—	—	—	—	—
	Numeric Ratio	100	100	100	100	100	100	100	100	100	100
Worm Torque at No Load (in-lb)	Standard	5	10	20	20	30	40	40	50	100	200
	Optional No. 1	5	10	20	20	30	40	40	50	100	200
	Optional No. 2	5	10	—	—	—	—	—	—	—	—
	Numeric Ratio	5	10	20	20	30	40	40	50	100	200
Maximum Horsepower per Actuator	Standard	2	4	5	5	5	8	8	8	15	25
	Optional No. 1	1/2	3/4	1-1/2	1-1/2	1-1/2	1-1/2	2-1/2	1-1/2	6	11
	Optional No. 2	3/4	2	—	—	—	—	—	—	—	—
	Numeric Ratio	1/2	3/4	1-1/2	1-1/2	1-1/2	1-1/2	2-1/2	1-1/2	6	11
Worm Torque at Full Load* (in-lb) 17-4PH Worm	Standard	120	450	750	1430	2050	2700	2640	4000	7500	16000
	Optional No. 1	50	185	400	820	1170	1700	1685	2400	4200	8600
	Optional No. 2	75	275	—	—	—	—	—	—	—	—
	Numeric Ratio	48	175	370	640	925	1500	1800	2411	4040	—
Worm Torque at Full Load* (in-lb) 316SS Worm	Standard	42	150	253	471	675	926	940	1366	2566	5466
	Optional No. 1	19	66	141	276	394	593	600	833	1466	3000
	Optional No. 2	27	95	—	—	—	—	—	—	—	—
	Numeric Ratio	25	57	67	109	144	336	635	350	619	—
Efficiency Rating (%) - 17-4PH Worm	Standard	22.1	22.1	26.5	20.9	22.0	22.4	22.4	17.4	13.3	12.4
	Optional No. 1	13.3	9.1	16.6	12.1	12.8	11.8	11.8	9.7	7.9	7.7
	Optional No. 2	17.7	18.1	—	—	—	—	—	—	—	—
	Numeric Ratio	13.3	9.1	8.6	7.5	6.9	5.3	5.3	4.6	3.9	—
Efficiency Rating (%) - 316SS Worm	Standard	20.3	21.1	25.1	20.3	18.8	17.9	17.9	17.0	12.9	12.1
	Optional No. 1	10.9	12.0	15.0	11.5	10.7	9.3	9.3	9.3	7.5	7.4
	Optional No. 2	15.5	16.8	—	—	—	—		—	—	—
	Numeric	10.9	8.0	7.5	5.8	5.4	4.5	5.0	4.5	3.6	—
Key Torque (in-lb) - 17-4PH Worm	Standard & Opt.	460	1750	4700	7580	10625	14000	16800	26500	47110	118200
	Numeric	460	1599	4077	6645	9369	11474	13770	18561	30970	—
Key Torque (in-lb) - 316SS Worm	Standard & Opt.	153	581	1565	2527	3538	4665	5600	8828	15697	39396
	Numeric	211	460	551	959	1199	2328	2800	2358	4087	—
Weight with 6 inch Stroke (Raise) (lb)		17	35	52	66	93	160	160	240	410	1200
Weight per additional 1 inch Stroke (Raise))lb)		0.3	0.9	1.4	1.5	2.6	2.5	2.5	3.7	5.5	9.0

*For loads from 25% to 100% of actuator capacity, torque requirements are approximately proportional to the load.
Note: Contact Duff-Norton Customer Service for motorized performance.

MACHINE SCREW
ACTUATORS — STAINLESS STEEL
2 TO 100 TON CAPACITY

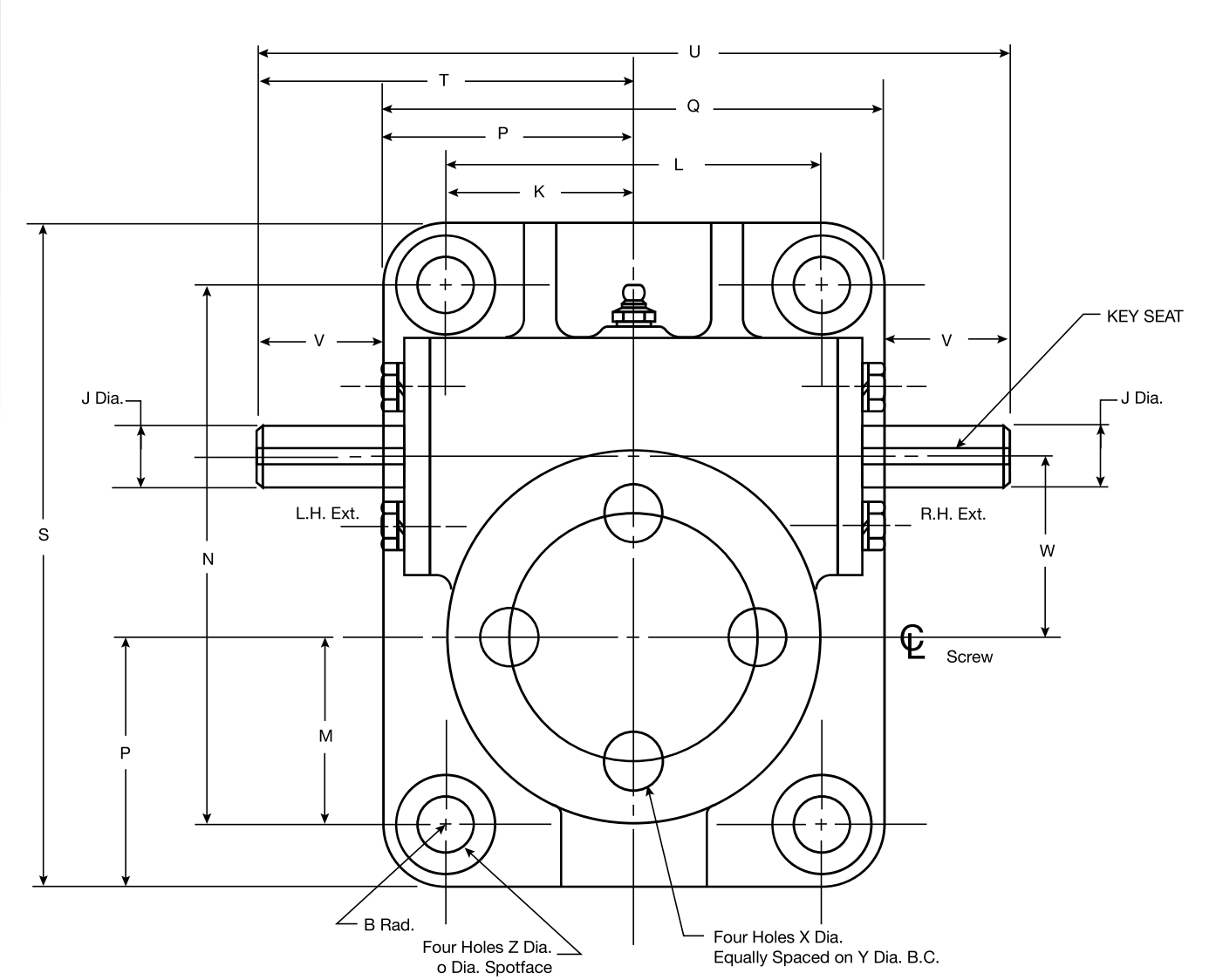

Product Specifications - Machine Screw Actuator Stainless Steel															
17-4 PH Worm Capacity (Tons)	316SS Worm Capacity (Tons)		A	B	C	D	E	F	G	H	J	K	L	M
	Sustaining	Operating					(±.005)				(+.000/ -.002)			
2 (1800 Series)	2	.67	5.50	4.56	Travel	.50	1.750	1.66	4.25	.50	.500	3.00	6.00	1.00
2 (9000 Series)	2	.67	5.50	4.56	Travel	.50	1.750	1.66	4.25	.50	.500	1.56	3.13	1.93
5	5	1.66	7.50	5.88	Travel	.50	2.250	2.38	4.50	.60	.749	2.25	4.50	2.25
10	10	3.33	7.75	5.62	Travel + 3/8	.50	2.250	2.88	5.75	.94	1.000	2.88	5.75	2.00
15	15	5.00	8.00	6.31	Travel + 9/16	.63	2.750	2.88	5.75	.94	1.000	3.00	6.00	2.50
20	20	6.66	10.25	7.13	Travel + 1/2	.75	3.250	3.50	5.75	.94	1.000	3.00	6.00	3.00
25 & 30	25	8.33	11.75	9.75	Travel + 1/4	1.00	4.000	4.50	8.50	.94	1.375	3.75	7.50	3.75
35	35	11.66	12.50	9.56	Travel + 1/4	1.25	4.000	4.50	10.50	1.31	1.375	3.75	7.50	4.50
50 (1800 Series)	50	16.66	13.50	11.38	Travel + 5/8	1.25	4.750	5.63	11.25	1.25	1.500	8.00	16.00	3.00
100	100	33.33	24.00	18.50	Travel + 1/2	1.50	6.000	7.00	14.00	2.94	1.750	10.00	20.00	5.75

Dimensions are subject to change without notice.

www.duffnorton.com • Ph: (800) 477-5002 • Fax: (704) 588-1994

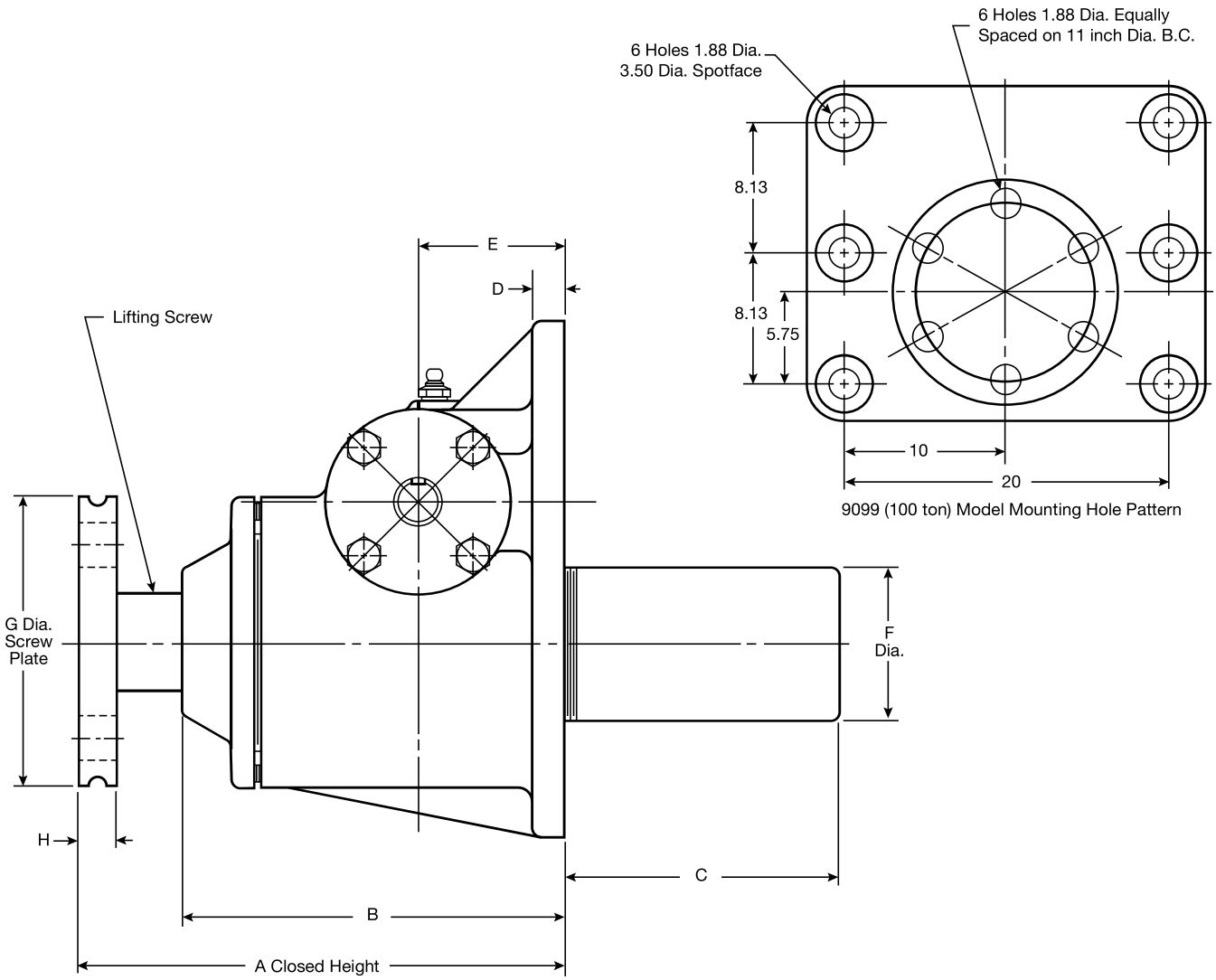

Product Specifications - Machine Screw Actuator Stainless Steel															
N	P	Q	R	S	T	U	V	W	X	Y	Z	a	b	Keyseat	Lifting Screw (Dia./Pitch)
2.00	3.50	7.00	1.75	3.50	3.50	7.00	1.12	1.702 +.003/-.000	.41	3.00	.41	.75	.5	.125 x .060 x 1.00 LG.	1.00 x .250
5.25	2.06	4.13	2.42	6.25	3.50	7.00	1.12	1.702 +.003/-.000	.41	3.00	.41	.88	.38	.125 x .060 x 1.00 LG.	1.00 x .250
6.50	3.00	6.00	3.00	8.00	4.50	9.00	1.50	2.188 +.002/-.000	.69	3.00	.69	1.19	.75	.188 x .094 x 1.25 LG.	1.50 x .375
7.00	3.75	7.50	2.88	8.75	5.50	11.00	1.80	2.598 +.003/-.000	.81	4.13	.81	1.31	.88	.250 x .125 x 1.50 LG.	2.00 x .500
7.50	3.88	7.75	3.38	9.25	5.50	11.00	1.80	2.598 +.003/-.000	.81	4.13	.81	1.38	.88	.250 x .125 x 1.50 LG.	2.25 x .500
8.75	4.13	8.25	4.13	11.00	5.50	11.00	1.50	2.598 +.003/-.000	.81	4.13	1.12	1.75	1.13	.250 x .125 x 1.50 LG.	2.50 x .500
11.00	5.13	10.25	5.13	13.75	7.00	14.00	2.30	3.750 +.006/-.000	1.06	6.00	1.38	2.13	1.38	.313 x .156 x 2.00 LG.	3.00 x .666
12.50	5.13	10.25	6.00	15.50	7.00	14.00	2.10	3.750 +.006/-.000	1.62	7.75	1.62	2.63	1.38	.313 x .156 x 2.00 LG.	3.75 x .666
6.00	9.88	19.75	4.88	9.75	11.00	22.00	4.40	5.313 +.003/-.000	1.38	8.75	1.88	3.25	1.88	.375 x .188 x 2.25 LG.	4.50 x .666
16.26	12.25	24.50	8.00	20.75	11.50	23.00	3.40	7.500 +.003/-.000	1.88	11.00	1.88	3.50	2.25	.500 x .250 x 3.00 LG.	6.00 x .750

Dimensions are subject to change without notice.

MACHINE SCREW
ACTUATORS — STAINLESS STEEL
STANDARD SCREW END DIMENSIONS

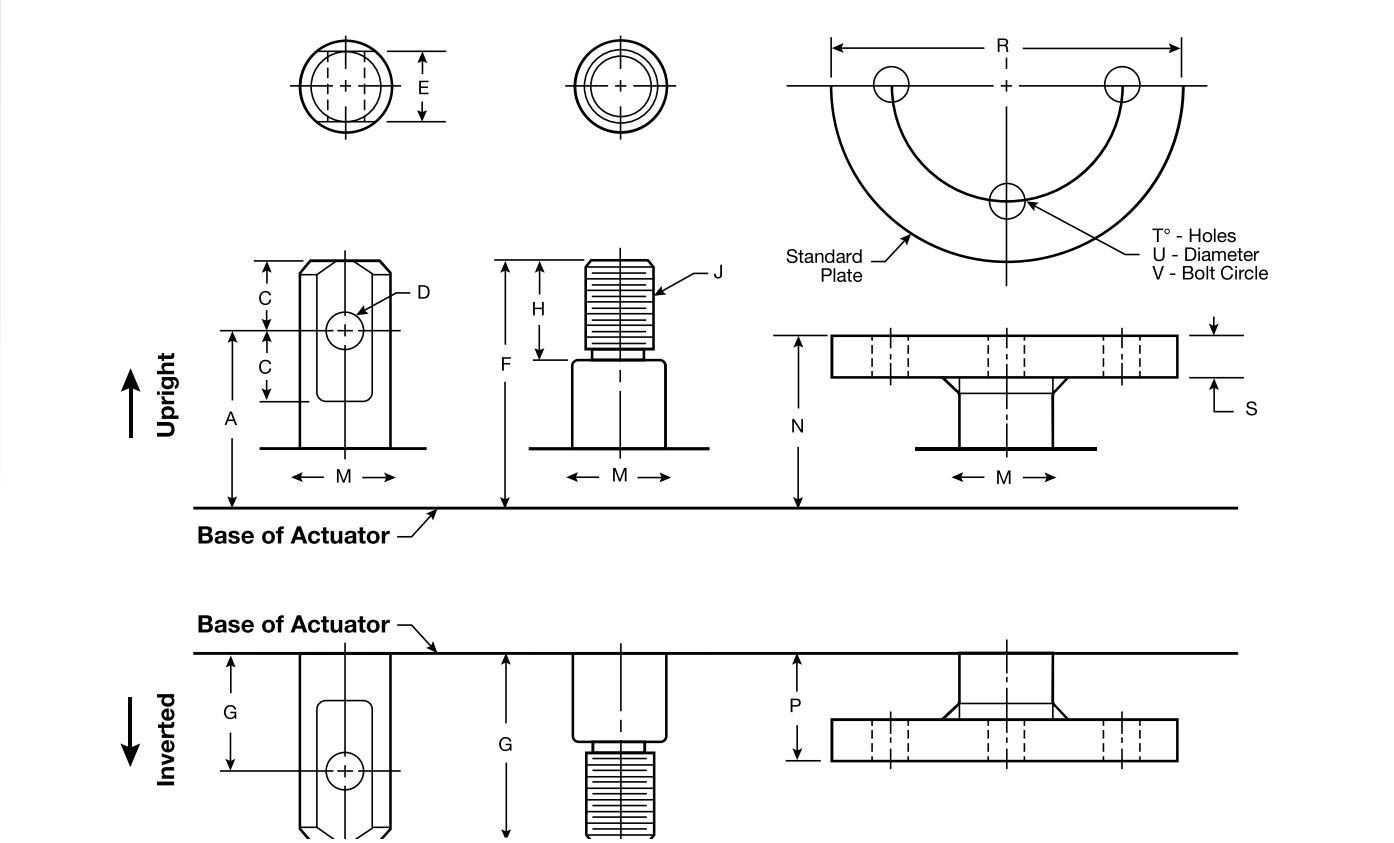

Dimensions - Machine Screw Actuator Stainless Steel Screw End																	
Capacity	A**	B**	C	D	E	F**	G**	H	J	M	N**	P**	R	S	T	U	V
2 Ton SMS	5-1/4	1-3/4	3/4	23/32	3/4	6	2-1/2	1-1/8	3/4"-10UNC-2A	1	5-1/4	1-3/4	4-1/4	7/16	4	13/32	3
5 Ton SMS	7	2-1/2	1	21/32	1	8	2-1/2	1-1/8	1"-8UNC-2A	1-1/2	7-1/2	2-1/2	4-1/2	5/8	4	11/16	3
10 Ton SMS	7-1/2	3	1-1/4	25/32	1-1/4	9-1/4	4-1/4	1-5/8	1-1/2"-6UNC-2A	2	7-3/4	2-3/4	5-3/4	15/16	4	13/16	4-1/8
15 Ton SMS	8-1/2	3	1-1/4	29/32	1-1/2	10-1/4	4-1/4	2	1-3/4"-5UNC-2A	2-1/4	8-1/2	2-3/4	5-3/4	15/16	4	13/16	4-1/8
20 Ton SMS	10	3-1/2	1-1/2	1-1/32	1-3/4	12-1/2	5	2-1/4	2"-4 1/2UNC-2A	2-1/2	10-1/4	3	5-3/4	15/16	4	13/16	4-1/8
25 & 30 Ton SMS	12	4	1-3/4	1-9/32	2-1/4	14-1/2	5-3/4	3-1/4	2-1/2"4-UNC-2A	3	11-3/4	3	8-1/2	15/16	4	1-1/16	6
35 Ton SMS	13	5	2	1-17/32	2-1/2	15-1/2	7	3-3/4	3-1/4"-4UNC-2A	3-3/4	12-1/2	4	10-1/2	1-5/16	4	1-5/8	7-3/4
50 Ton SMS	15	5-1/2	2-1/2	1-21/32	3-1/4	18	8	4-1/4	4" 4UNC-2A	4-1/2	13-1/2	3-1/2	11-1/4	1-1/4	4	1-3/8	8-3/4
100 Ton SMS	24	9	3	2-17/32	4-1/4	25	12	5	2-1/2"-12UNC-2A	6	24	12	14	2-15/16	6	1-7/8	11

**Closed dimensions may increase for actuator units supplied with bellows boots. Consult Customer Service.

Note: Lifting screws listed above are not keyed, and i.c. must be held to prevent rotation.

Keyed lifting screws and keyed anti-backlash models also available. Consult Customer Service.